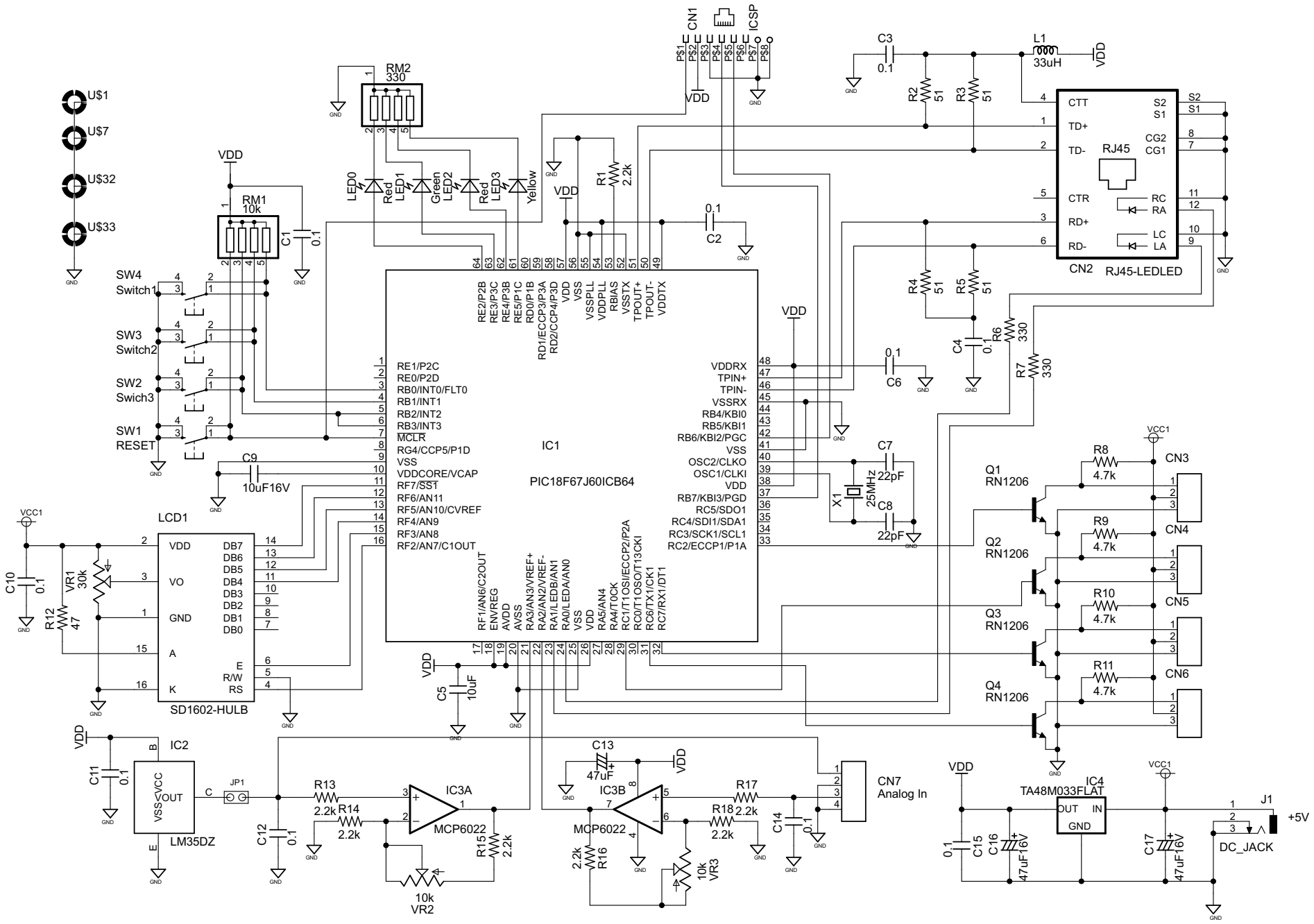

2008/04/28 10:47:21 f=0.90 D:\Eagle\Myproject\PIC18_Eather_03\PIC18_Eather_03.sch (Sheet: 1/1)