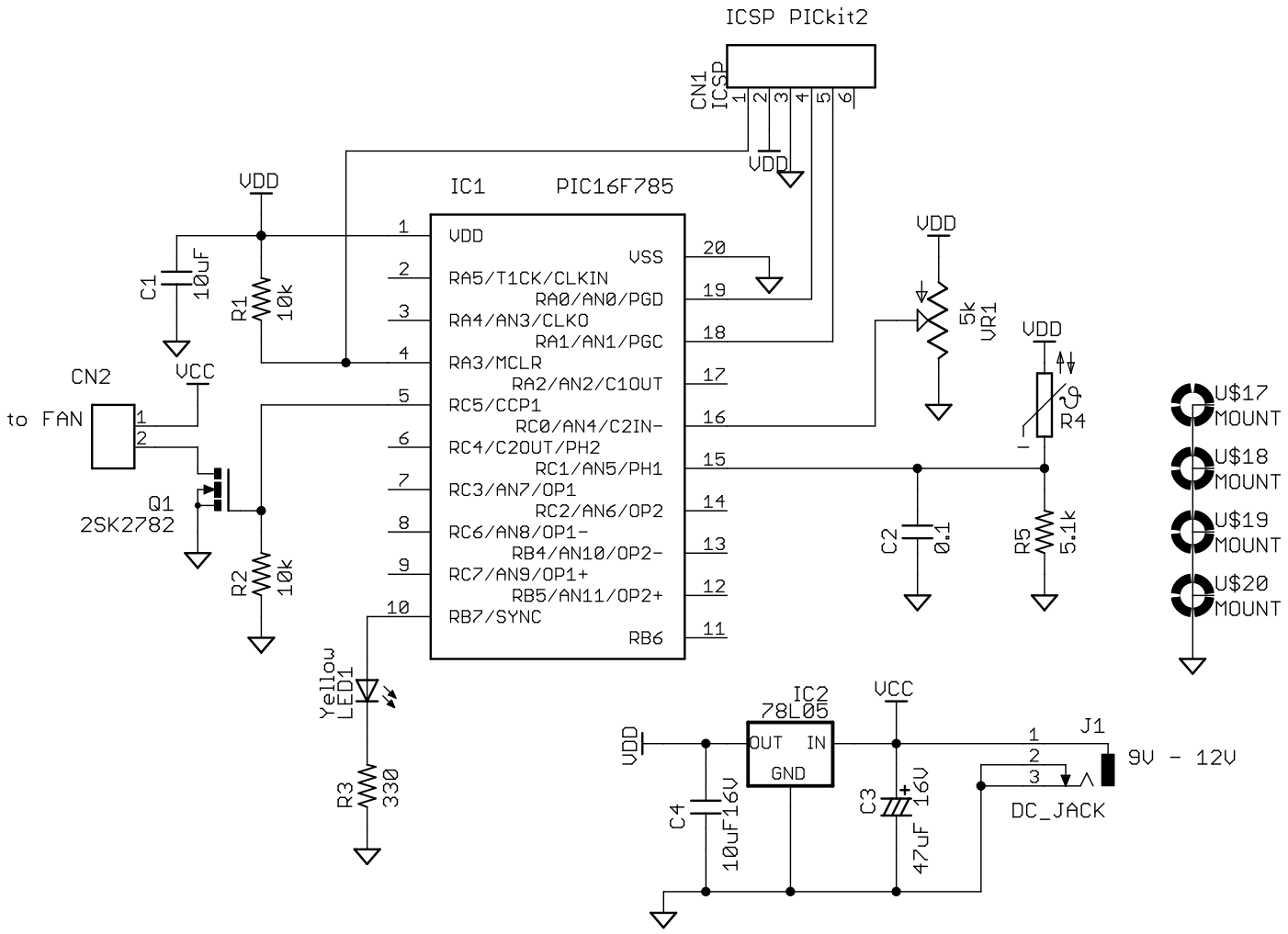
ICSP PICkit2
CN1
ICSP
1
2
3
4
5
6
VDD
IC1
PIC16F785
VDD
VSS
RA5/T1CK/CLKIN
RA0/AN0/PGD
RA4/AN3/CLKO
RA1/AN1/PGC
RA3/MCLR
RA2/AN2/C1OUT
RC5/CCP1
RC0/AN4/C2IN-
RC4/C2OUT/PH2
RC1/AN5/PH1
RC3/AN7/OP1
RC2/AN6/OP2
RC6/AN8/OP1-
RB4/AN10/OP2-
RC7/AN9/OP1+
RB5/AN11/OP2+
RB7/SYNC
RB6
C1
10uF
R1
10k
CN2
to FAN
VCC
Q1
2SK2782
R2
10k
Yellow
LED1
R3
330
VR1
5k
R4
C2
0.1
R5
5.1k
U$17
MOUNT
U$18
MOUNT
U$19
MOUNT
U$20
MOUNT
IC2
78L05
OUT
IN
GND
C4
10uF16V
C3
47uF 16V
J1
9V - 12V
DC_JACK