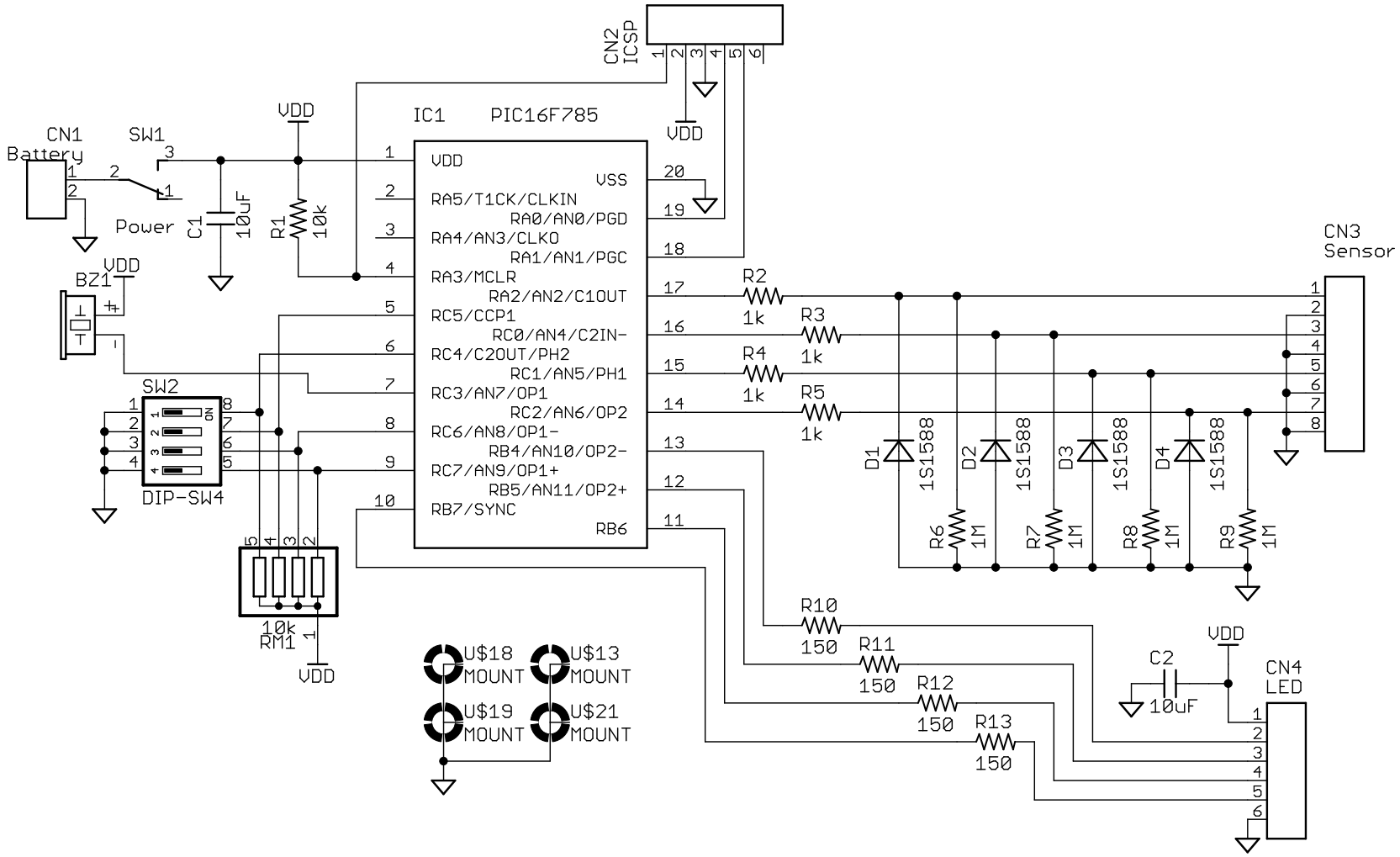
CN2
ICSP
IC1 PIC16F785
VDD
VSS
RA5/T1CK/CLKIN
RA0/AN0/PGD
RA4/AN3/CLKO
RA1/AN1/PGC
RA3/MCLR
RA2/AN2/C1OUT
RC5/CCP1
RC0/AN4/C2IN-
RC4/C2OUT/PH2
RC1/AN5/PH1
RC3/AN7/OP1
RC2/AN6/OP2
RC6/AN8/OP1-
RB4/AN10/OP2-
RC7/AN9/OP1+
RB5/AN11/OP2+
RB7/SYNC
RB6
CN1
Battery
SW1
Power
C1
10uF
R1
10k
BZ1
SW2
DIP-SW4
RM1
10k
U$18
MOUNT
U$13
MOUNT
U$19
MOUNT
U$21
MOUNT
R2
1k
R3
1k
R4
1k
R5
1k
D1
1S1588
D2
1S1588
D3
1S1588
D4
1S1588
R6
1M
R7
1M
R8
1M
R9
1M
CN3
Sensor
R10
150
R11
150
R12
150
R13
150
C2
10uF
CN4
LED